LOC I-FND	APP CRS	Rwy ldg	8301
111.7	155°	TDZE	138
		Apt Elev	146

BALTIMORE/ WASHINGTON INTL THURGOOD MARSHALL (BWI)
ILS or LOC RWY 15R

T A Simultaneous approach authorized with Rwy 15L. DME or Radar required. DME from BAL VORTAC.
RVR 1800 authorized with use of FD or AP or HUD to DA.

MALSR A5

MISSED APPROACH: Climb to 900 then climbing right turn to 2600 on BAL VORTAC R-294 to DATED INT/BAL 14.9 DME and hold.

D-ATIS	POTOMAC APP CON	BALTIMORE TOWER	GND CON	CLNC DEL
115.1 127.8	119.0 282.275 (020°-100°) 119.7 290.475 (131°-180°) 124.55 317.425 (101°-130°) 128.7 307.9 (181°-019°)	119.4 257.8	121.9	118.05

CPDLC

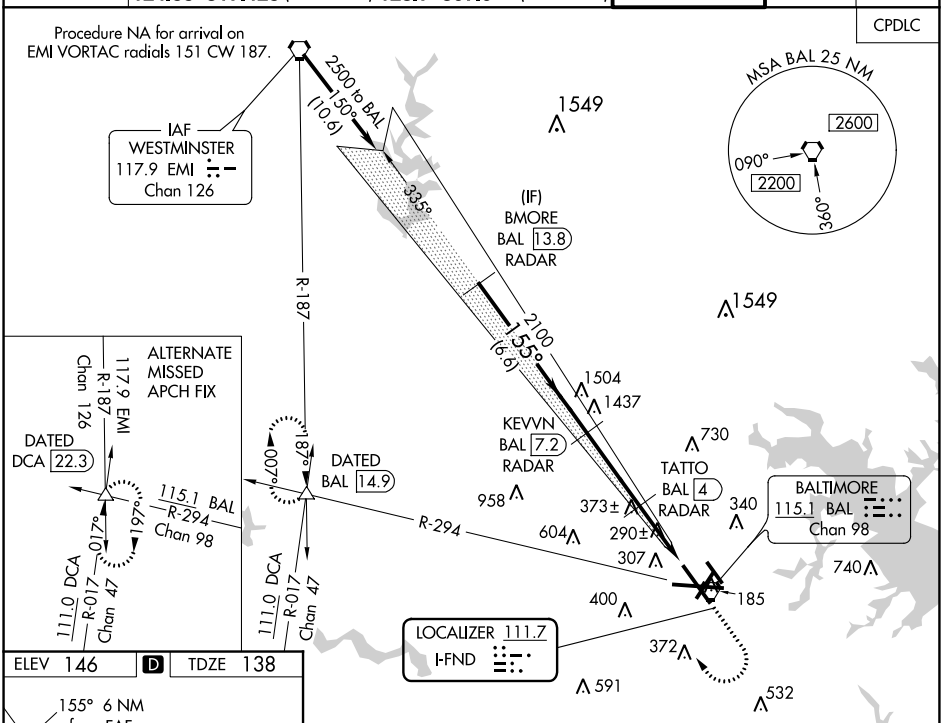

ELEV 146 D TDZE 138

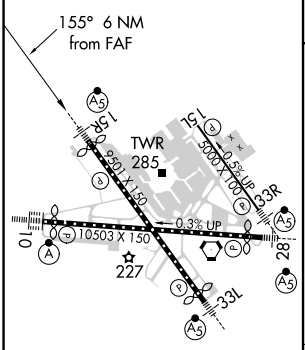

TDZ/CL Rwys 10 and 33L
REIL Rwys 15L and 33R
HIRL all rwys

FAF to MAP 6 NM					
Knots	60	90	120	150	180
Min:Sec	6:00	4:00	3:00	2:24	2:00

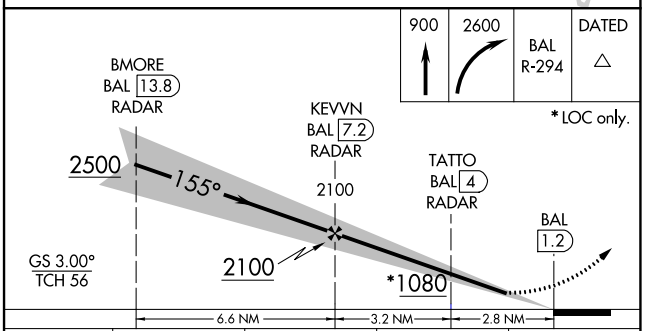

CATEGORY	A	B	C	D
S-ILS 15R	#338/24 200 (200-½)			
S-LOC 15R	540/24 402 (400-½)		540/40 402 (400-¾)	
C CIRCLING	640-1 494 (500-1)	660-1 514 (600-1)	700-1½ 554 (600-1½)	880-2¼ 734 (800-2¼)

NE-3, 05 NOV 2020 to 03 DEC 2020